TRS-80 Model I Speed Up
System 80 in Brackets

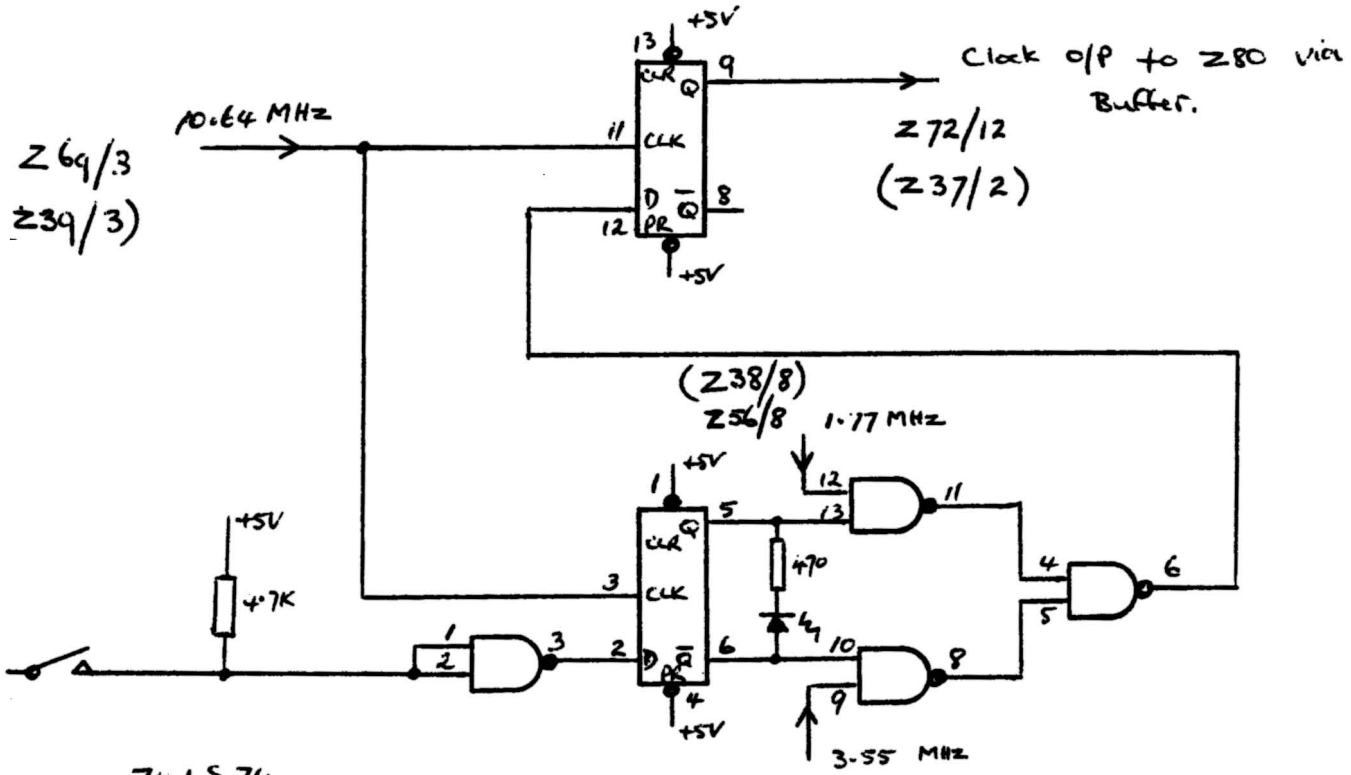

74LS74
74LS00
1 4.7K
1 TRI Colour LED

Cut IC leg Z72/12 TRS 80
Z37/2 SYSTEM 80
} Breaks normal Clock to Z80.

Cut IC leg Z69/5 TRS 80
Z40/5 SYSTEM 80

Connect Z69/10 to Z69/12 TRS 80
Connect Z39/10 to Z39/12 SYSTEM 80

} Improve Memory selection